2.0 Test Setup

Notes: For I/O Test Setup, please refer Appendix: I/O Test Setup (i) to (iv).

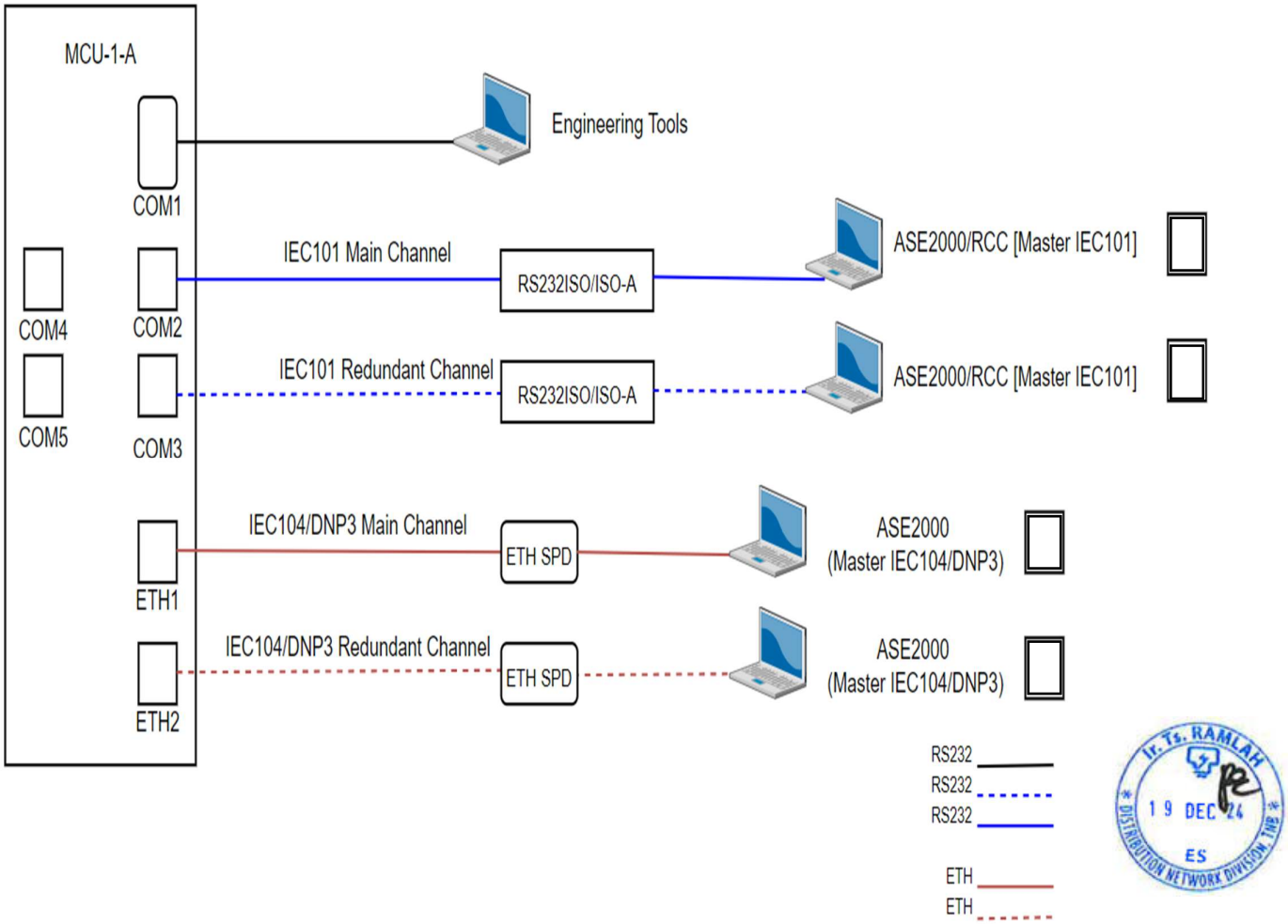

Tested By:
(Signature/Official Stamp)

Tester's
Name:
Date:

Witnessed By:
(Signature/Official Stamp)

TNB QAI's
Name: Muhammad Azamuddin Bin Hasan
Date: